DOOSAN

PUMA TL2000/2500 series

High Productivity 4-Axis Turning Center

PUMA TL2000
PUMA TL2000L / M / LM
PUMA TL2500
PUMA TL2500L / XL / M/ LM / XLM

MACHINE GREATNESS™

Basic Information

Basic Structure

Detailed Information

Options
Applications
Capacity Diagram
Specifications

Customer Support Service

PUMA TL2000/2500

The PUMA TL2000/2500 series is engineered to increased productivity through high efficiency.
As a process-integrated machine the PUMA TL provides a new level of performance and capabilities.

Contents

02 Product Overview

Basic Information

04 Basic Structure

Detailed Information

08 Standard / Optional Specifications
09 Applications
12 Capacity Diagram
19 Machine / NC Unit Specifications

22 Customer Support Service

High Performance for shaft machining

These DOOSAN machines offer a high level of machining capability to provide optimum productivity for the customer.

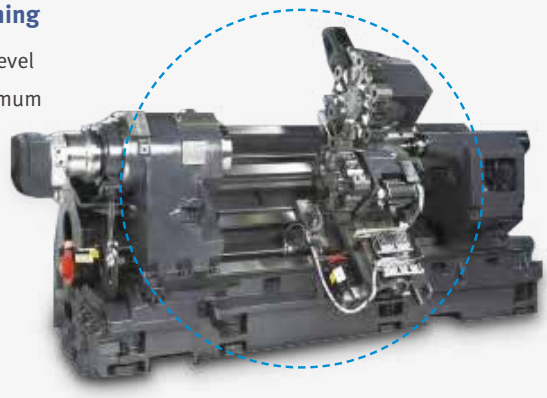

Machining flexibility

Provides outstanding performance with accuracy and time savings by virtue of a single set-up.

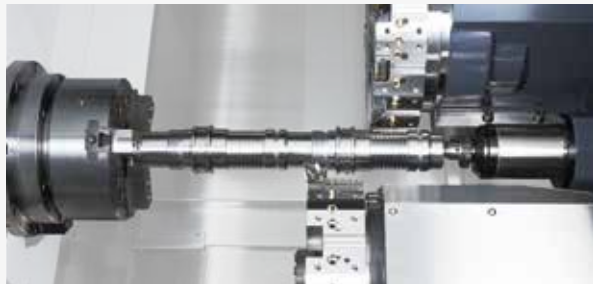

Sample

The powerful built in spindle motor

The powerful built in spindle motor allows for a wide range machining operations, from precise finishing to high powered metal removal using both turrets at the same time.

Basic structure

4-axis linear controlled machine establishes multi-axis functional performance with simultaneous control of both turrets for middle diameter shaft workpieces

The combining of a high performance integral spindle motor with upper and lower multi-axis turrets yields a machine perfectly engineered for high productivity and optimum efficiency.

Travel distance

X1-axis 250 mm (9.8 inch)

Z1-axis 650 [1050/1300] mm (25.6 [41.3/51.2] inch)

X2-axis 150 mm (5.9 inch)

Z2-axis 630 [1030/1280] mm (24.8 [40.6/50.4] inch)

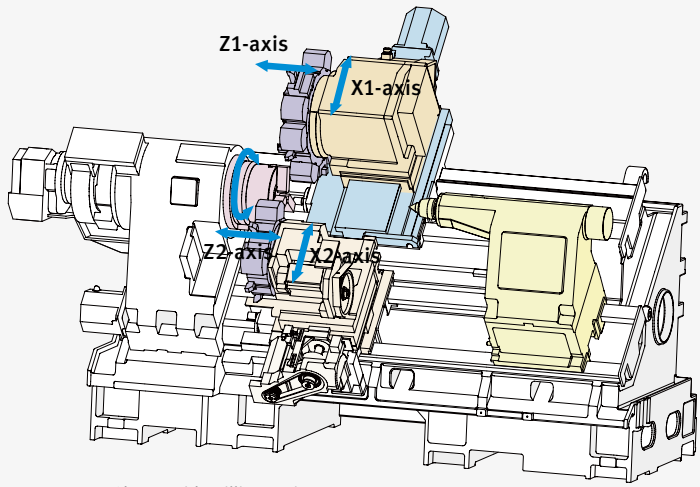

* Shown with milling option

Robust Design

The heavily ribbed triangular torque frame resists eccentric loads. A 45° inclined wall is inserted into triangular frame under the center of the frame, to endure high stress due to X direction forces.

FEM Structural Analysis

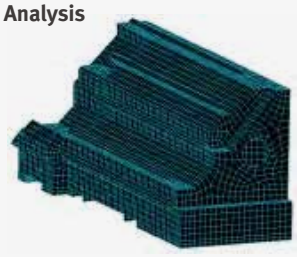

Torque Tube of Triangular Frame

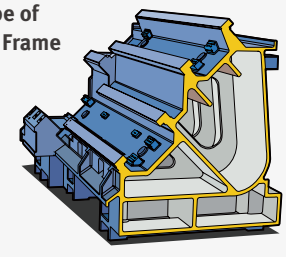

Machining Flexibility

- Accuracy and time savings by virtue of a single set-up.
- Unmanned operation by automation support.
- Less floor space and increased productivity.

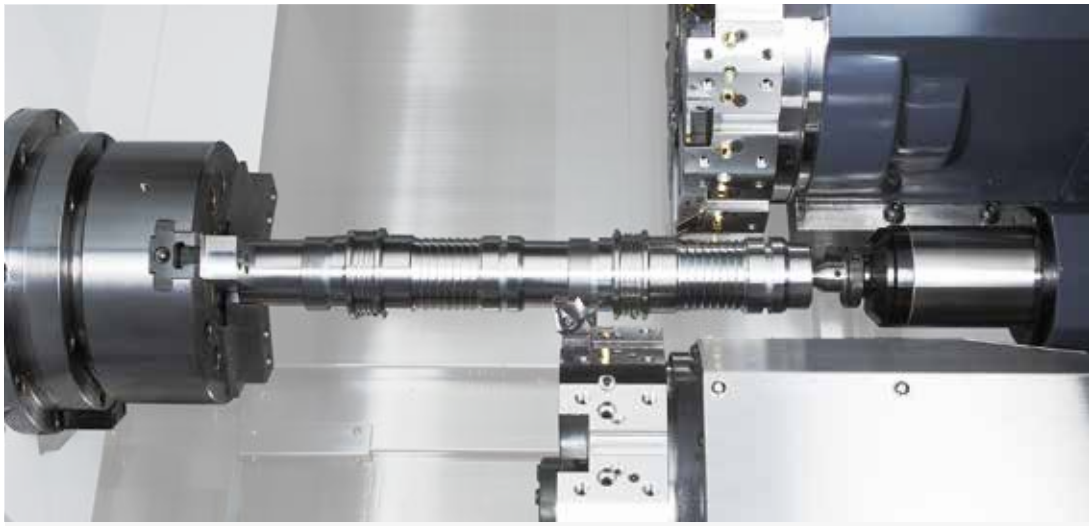

Long shaft working by follow rest operation to prevent chatter

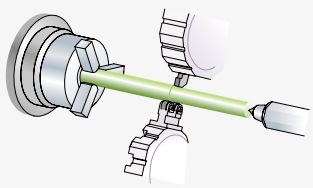

Balanced turning by 4-axis

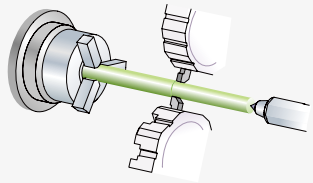

Simultaneous 4-axis turning

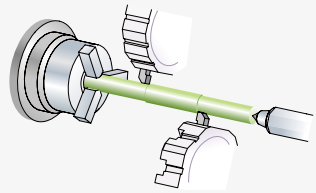

Working Range

PUMA TL series forms the largest machining area in its class to yield the maximum productivity with the minimum costs.

(A) Max. turning diameter of

TL2000[L] / TL2500[L/XL]

(on upper turret) **370 mm (14.6 inch)**

(on lower turret) **240 mm (9.4 inch)**

(B) Max. turning length of

600 [1000/1250] mm (23.6 [39.4/49.2] inch)

*[ ] : Long bed models

Max. bar working diameter of

ø65/76 mm (ø2.6/3.0 inch)

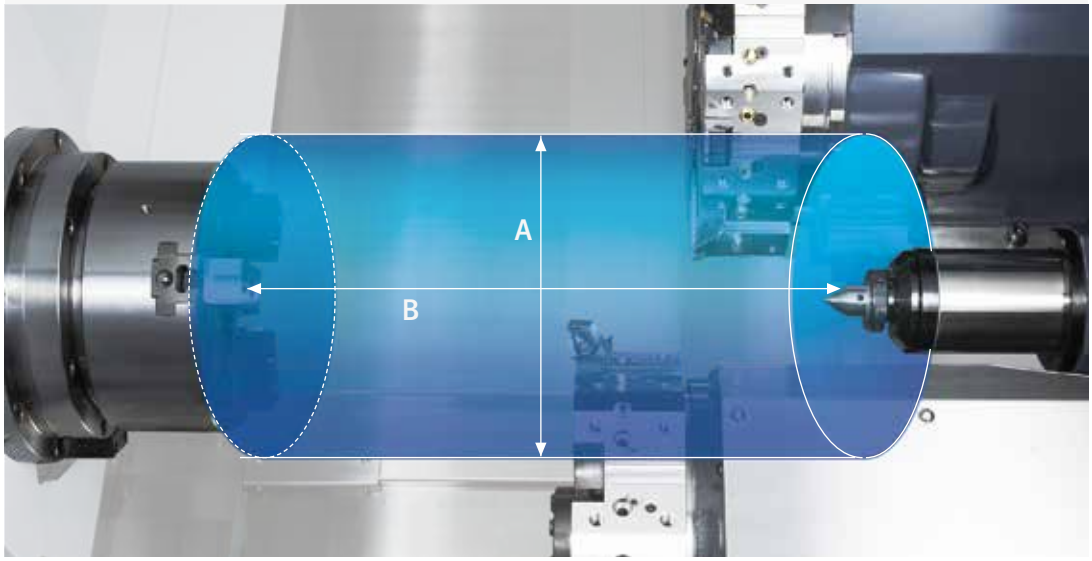

Spindle

The powerful built in spindle motor allows for a wide range machining operations, from precise finishing to high powered metal removal using both turrets at the same time.

Max. spindle speed

PUMA TL2000/2000M

5000 r/min

PUMA TL2500/2500M

4000 r/min

Max. spindle motor power

PUMA TL2000/2000M

22/15 kW
(29.5/20.1 Hp)

PUMA TL2500/2500M

26/22 kW
(34.9/29.5 Hp)

Oil Cooling Unit for Spindles

Motor is surrounded by an oil jacket cooling system to minimize thermal displacement and ensure consistency through a wide range of cutting conditions.

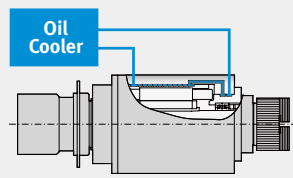

Tail Stock

The widely spaced guide ways and heavy-duty tailstock design ensures ample rigidity. The tailstock is positioned by a drive bar that engages with the carriage.

Tail stock quill type	-	MT#5
Tail stock quill diameter	mm (inch)	100 (3.9)
Tail stock quill travel	mm (inch)	120 (4.7)
Tail stock quill thrust force	kN	17 / 8.8(PUMA TL2500XL/XLM)

Turret

Rotation of the turret is controlled by servo motor for rapid and accurate selection of tools. The M model is fitted with DOOSAN's unique BMT turret to provide superior performance for milling operations.

Total 20 tool stations of upper (optional milling upper turret only TL2000M/2500M) and lower turrets make it possible to complete complicated parts requiring many tools in just one set-up. Reliable servo driven turrets reduce the total cycle time required to machine parts.

Turret indexing time (1-station swivel)

0.15s

No. of tool station (Upper+Lower turret)

20[12+8] station

Radial BMT

The turret features BMT55P style tooling in which the toolholders are mounted directly to the turrets periphery using 4 large bolts.

Axis system

Each axis is powered by a maintenance free digital AC servo motor. These high torque drive motors are connected to the ball screws without intermediate gears for quiet and responsive slide movement with virtually no backlash.

Rapid traverse rate(X/Z-axis)

20/24 m/min(787.4/944.9 ipm)

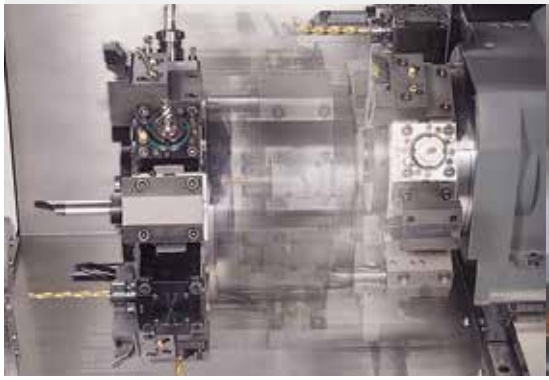

Standard / Optional Specifications

Various options are available to satisfy all the customers' requirements.

● Standard ○ Optional X N/A

NO.	Description	Features	PUMA TL2000/2500series
1	Chuck	210 mm (8 inch)	PUMA TL 2000
2		255 mm (10 inch)	PUMA TL 2500
3		None	○
4	Jaws	Soft Jaws	●
5		Hardened & Ground Hard Jaws	○
6	Chucking option	Dual Pressure Chucking	○
7		Chuck Clamp Confirmation	●
8	Tailstock	Tailstock quill for built-in(dead) center	○
9	Coolant pump	1.5 bar	●
10		4.5 / 7 / 10 / 14.5 bar	○
11	Coolant options	Oil Skimmer	○
12		Coolant Chiller	○
13		Coolant Pressure Switch	○
14		Cooling Flow Switch	○
15		High Coolant Interface	○
16		Chuck Coolant	○
17		Coolant Gun	○
18	Chip processing options	Chip Conveyor_Side Type	○
19		Chip Conveyor_Rear Type	○
20		Chip Bucket	○
21		Air Blow	○
22		Mist Collector	○
23	Measurement & Automation	Tool Setter (Manual / Auto)	○
24		Parts Catcher And Box	○
25		Auto Door	○
26		Robot Interface (PMC I/O, Profibus)	○
27		Bar Feeder Interface	○
28		Bar Fuller	○
29	Customized Special Option	V Stand For Shaft Workpiece	○
30		Automatic Top Door	○
31		Coolant Chiller	○
32		Chip Conveyor_Drum Filter Type	○
33		Shower Coolant	○
34		Air Limit Sensing On Chuck Preparation	○
35		Rotary Type Window Wiper_Eletrical	○
36		TSC For Main/Left Spindle	○
37		TSA For Main/Left Spindle	○
38		Work & Tool Counter	○
39		Tool Setter Extension For Special Chuck	○
40		Main/Left Spindle Air Curtain	○
41		MQL System	○
42		Chuck Pressure Switch	○
43		Coolant Level Switch : Sensing Level - Low	○
44		Quick Change Tooling(CAPTO)	○

* For further details of the range of options, please contact.

Peripheral equipments

Chip Conveyor (right side) option

The chip conveyor boasts excellent chip disposal performance, a stable design, and superior operation and maintenance convenience.
Users can select the optimal type for specific requirements to improve the efficiency of their work space.

Name	**Hinged belt**	**Magnetic scrapper**	**Drum filter** (single type)	**Drum filter** (double type)
Application	Steel	Cast steel, iron	Cast	Steel, cast, nonferrous metals
Features	- General use - Suitable for steel works producing 30 mm chips or longer	- Easy-to-understand manual - Chips are scraped up and discharged	- Suitable for sludge - Suitable for nonferrous metals	- Suitable for long and short chips - Cooling water filtering function
Shape	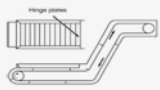	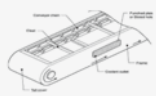	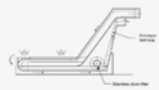	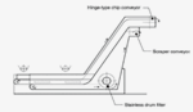

Coolant Chiller (recommended) option

A detachable-type coolant chiller is recommended to control temperature and minimize thermal error.

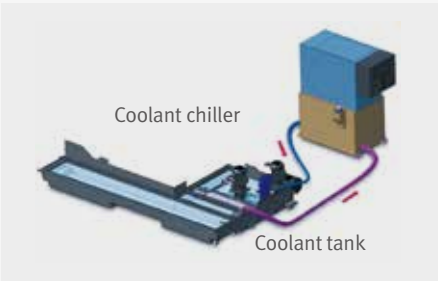

Quick change CAPTO option

The Quick Change Tool system simplifies tool change operation. Recommended for users who need to change tools frequently or reduce the set-up time.

Oil skimmer option

The oil skimmer keeps coolant and lubricant isolated from each other for extending lifecycle of coolant.

Optional devices option

Auto tool setter

Coolant Blower

Singnal tower

Collet Chuck

Mist collector option

The mist collector absorbs airborne oil vapor and fine dusts in the system to improve working environment

Part catcher option

The part catcher automatically accepts parts completed of machining, and ejects them out of the system.

Work Ejector option

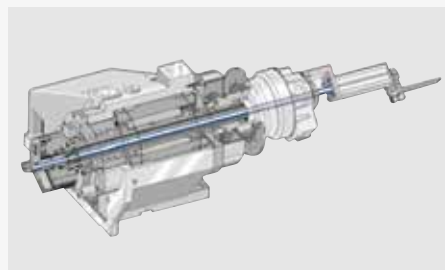

DOOSAN Fanuc i Plus

DOOSAN Fanuc i Plus is optimized for maximizing customer productivity and convenience.

15 inch screen + New OP

DOOSAN Fanuc i Plus' operation panel enhances operating convenience by incorporating common-design buttons and layout, and features the Qwerty keyboard for fast and easy operation.

DOOSAN Fanuc i Plus
- 15 inch color display Intuitive and user-friendly design

USB & PCMCIA card QWERTY keyboard
- EZ-guide i standard
- Ergonimic operator panel
- 2MB Memory
- Hot key

iHMI Touch screen option
- iHMI provides an intuitive interface that utilizes a touch screen for quick and easy operation

Variety of applications
- Providing various applications related to PLANNING, MACHINING, IMPROVEMENT, and UTILITY for customer convenience.

Productivity Improvement

non-cutting time has been reduced by speeding up individual machine element operating speeds and increasing acceleration / deceleration characteristics.

Non-cutting time

Reduced by 10%

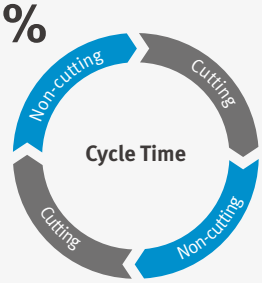

Multi M code

Up to 3 M-code commands can be used for a block, thereby enabling simultaneous processing and further reducing non-cutting time.

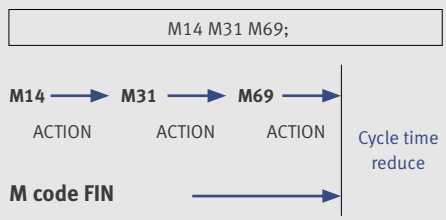

Tailstock EZ function

In programmable tail stock, the Z-axis position of tail stock is recorded automatically as the clamped position of tail stock.

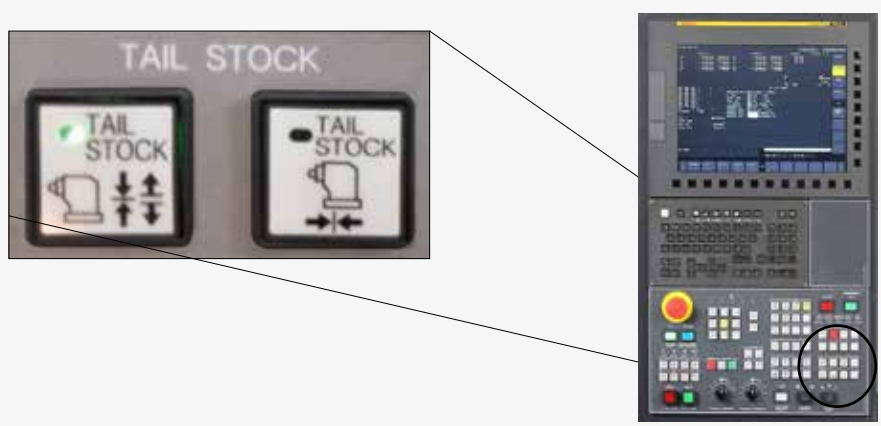

EZ-Guide i

Using the DOOSAN EZ-Guide i, users can create a cutting program for any desired shape, including patterns, by entering figures only.

Example programming

Cutting shape

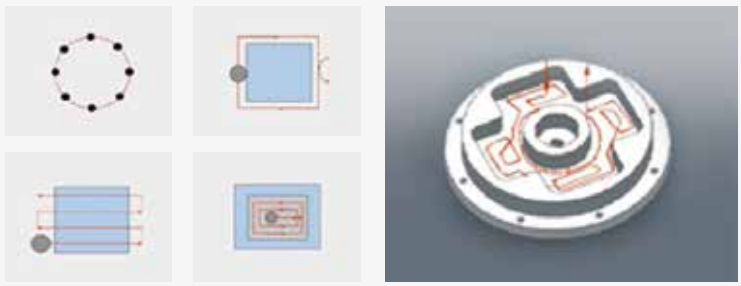

EZ-Guide i screen

Enter the dimensions of the shape.

Automatic creation of cutting program

```
O7000 (SAMPLE PROGRAM) ;
...
M3 S1500 ;
G0 X50. Y125. ;
G0 Z30. ;
G1040 T0.5 J3. H0.2 K0.5 ··· ;
G1020 H120. V50. U37. W68. ··· ;
G0 Z80. ;
M5 ;
```

A cutting program is automatically created with the entered values.

Easy Operation Package

Doosan's Easy Operation Package (EOP) supports the user with functions relating to tool data, error diagnostics, set up and machine monitoring.

Tool Load Monitoring Function

During cutting operation, abnormal load caused by wear or damage of the tool is detected and an alarm is triggered to prevent further damage.

Tool monitoring screen

Convenience of Maintenance and Service

The condition and service procedures of the sensors are provided for easy maintenance and servicing of major units.

Turret maintenance and service screen

Spindle Power-Torque Diagram

PUMA TL2000/2000M

Max. spindle speed

5000 r/min

Max. spindle motor power

22kW (29.5 Hp)

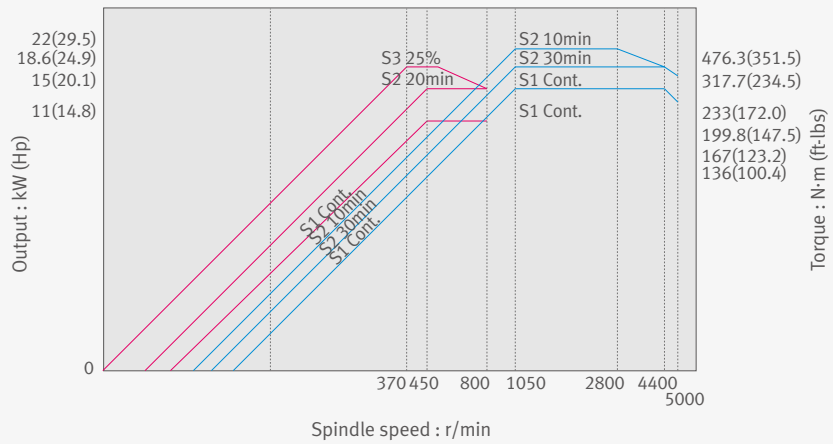

PUMA TL2500/2500M

Max. spindle speed

4000 r/min

Max. spindle motor power

26kW (34.9 Hp)

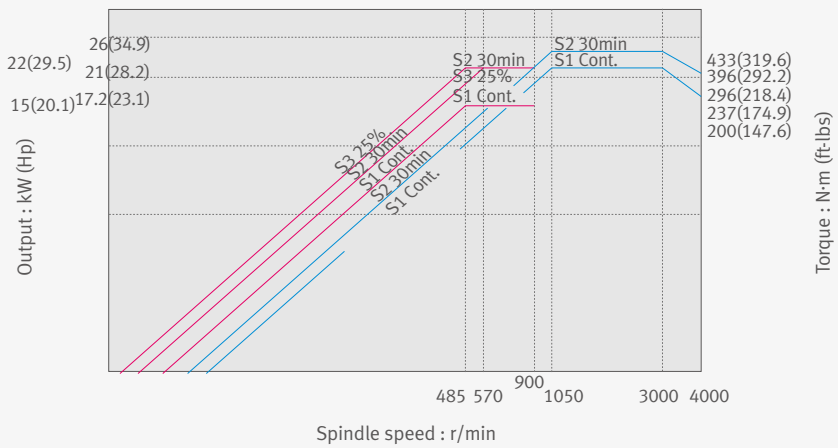

Rotary tool spindle power-torque

Max. spindle speed

5000 r/min

Max. spindle motor power
(S3 25% / Cont.)

5.5/1.1kW (7.4/1.5 Hp)

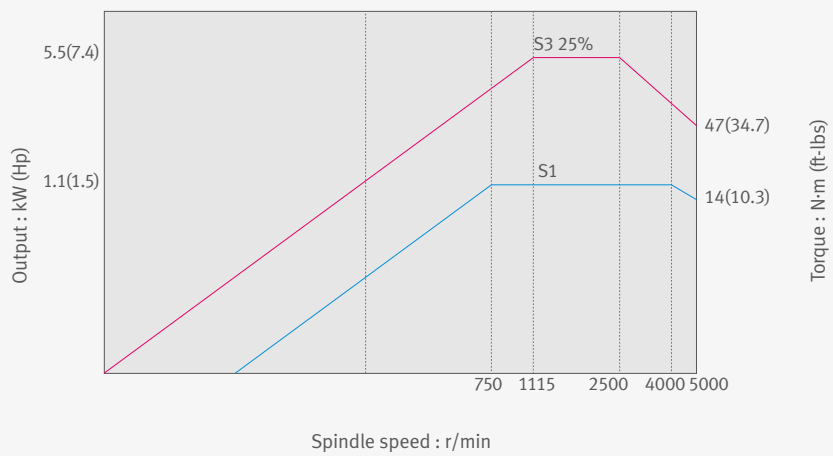

External Dimensions

PUMA TL 2000/2500

Unit : mm (inch)

Top View

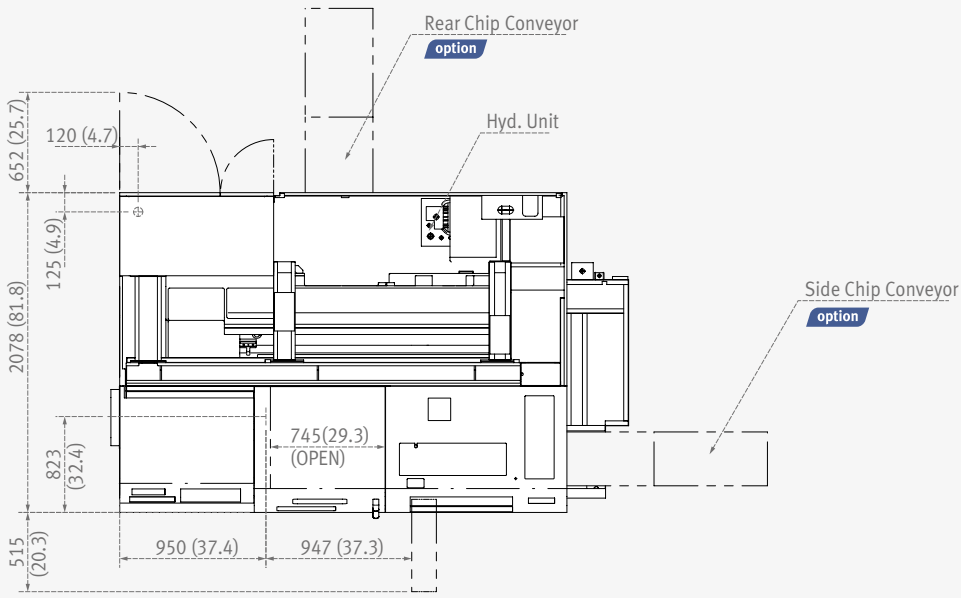

Front View

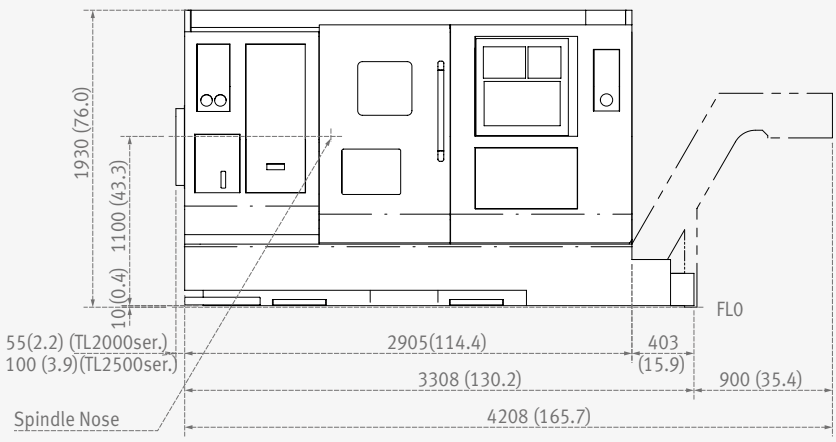

Side View

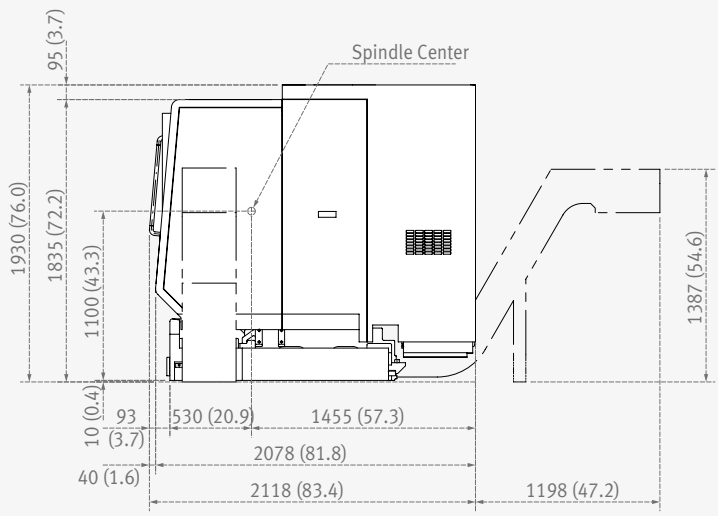

* Some peripheral equipment can be placed in other places

External Dimensions

PUMA TL 2000L/2500L

Unit : mm (inch)

Top View

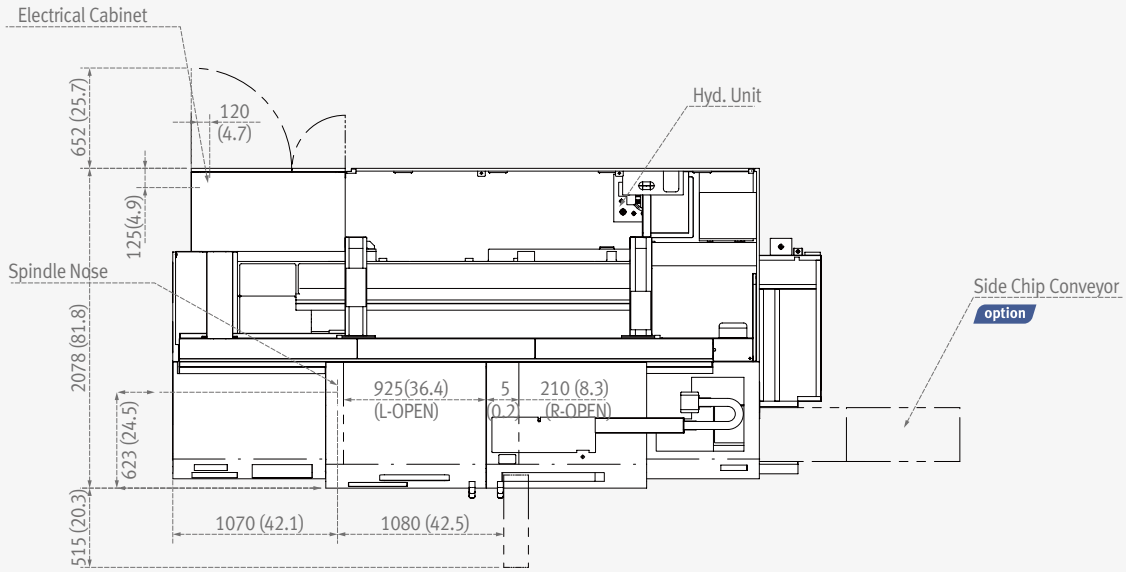

Front View

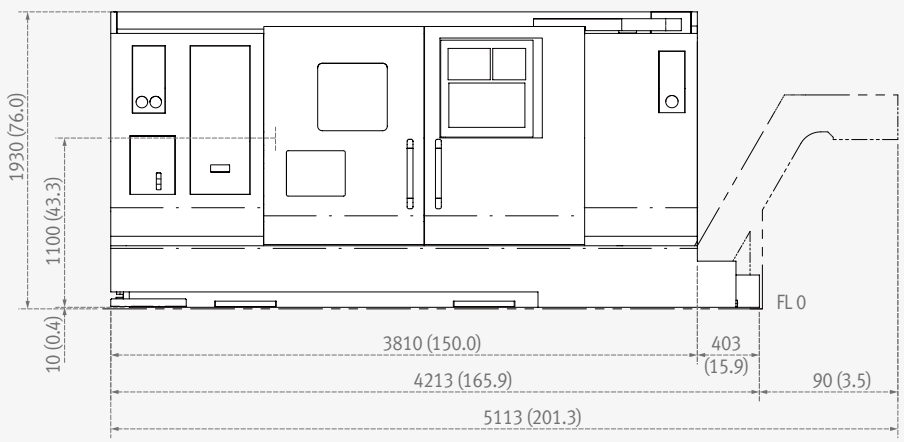

Side View

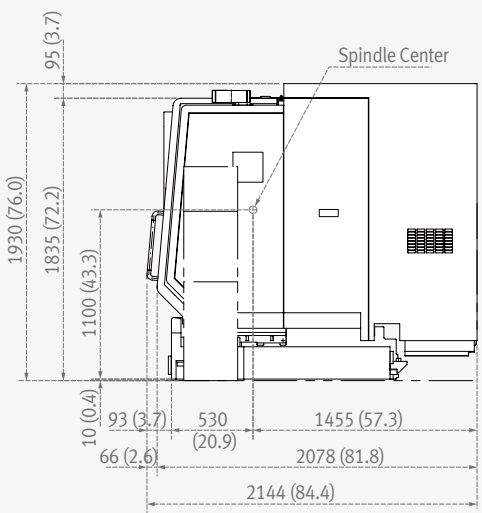

* Some peripheral equipment can be placed in other places

PUMA TL2500XL/XLM

Unit : mm (inch)

Top View

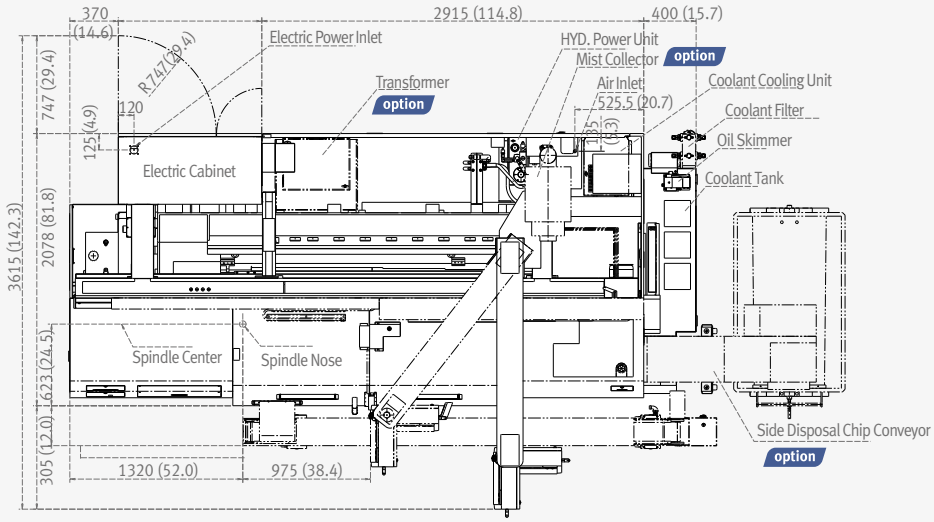

Front View

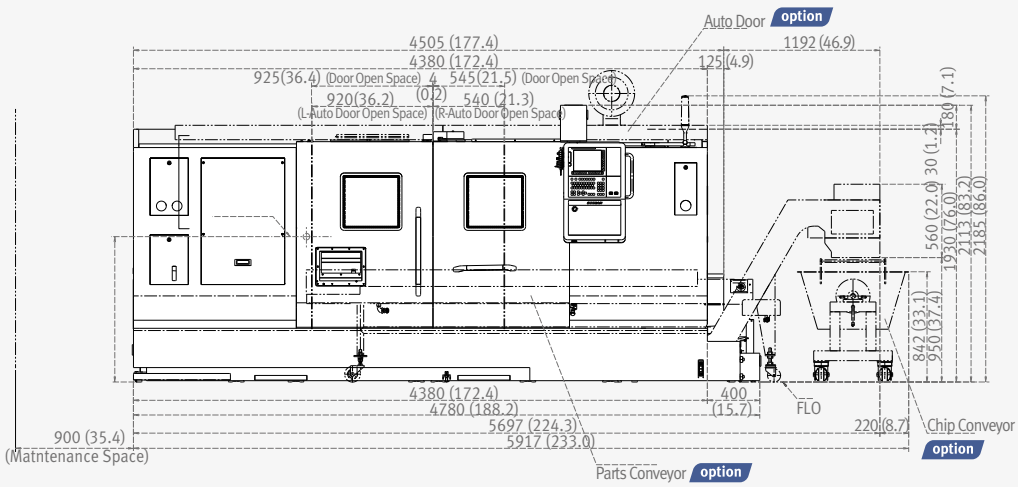

Side View

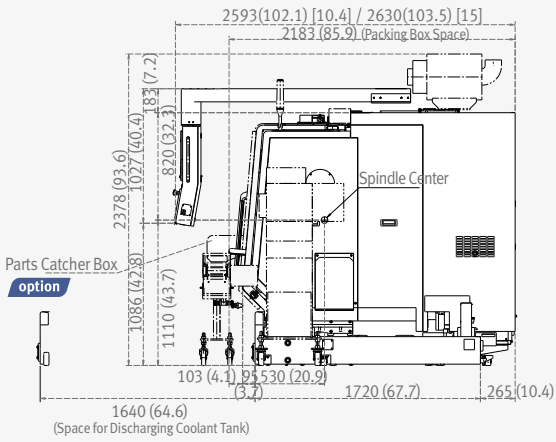

Tooling System

PUMA TL 2000/2500 (Upper & Lower Turret)

Unit : mm (inch)

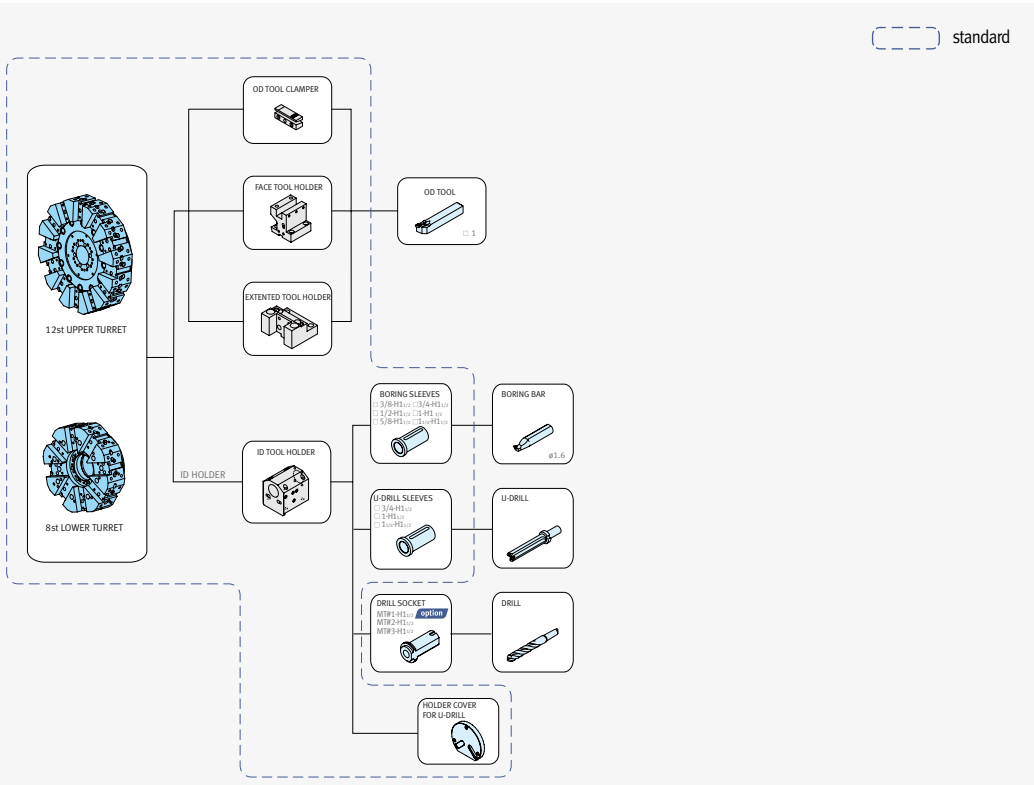

PUMA TL 2000M/2500M (Upper & Lower Turret)

Unit : mm (inch)

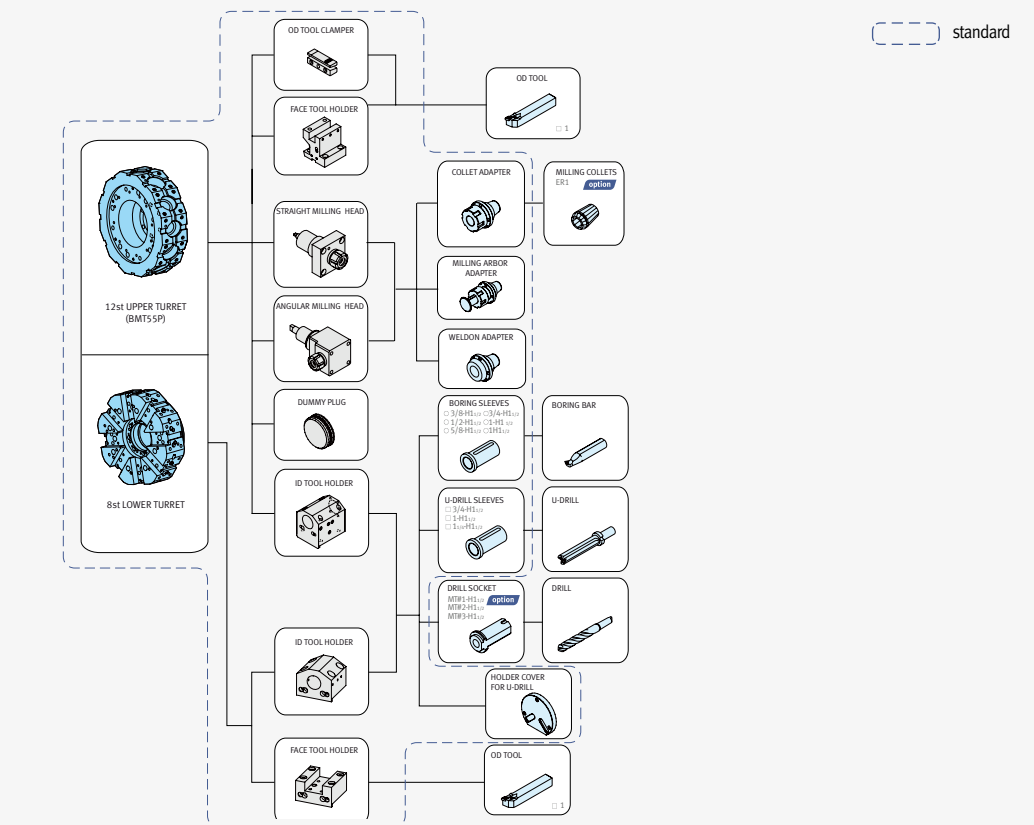

Tool Interference Diagram

PUMA TL 2000/2500

Unit : inch

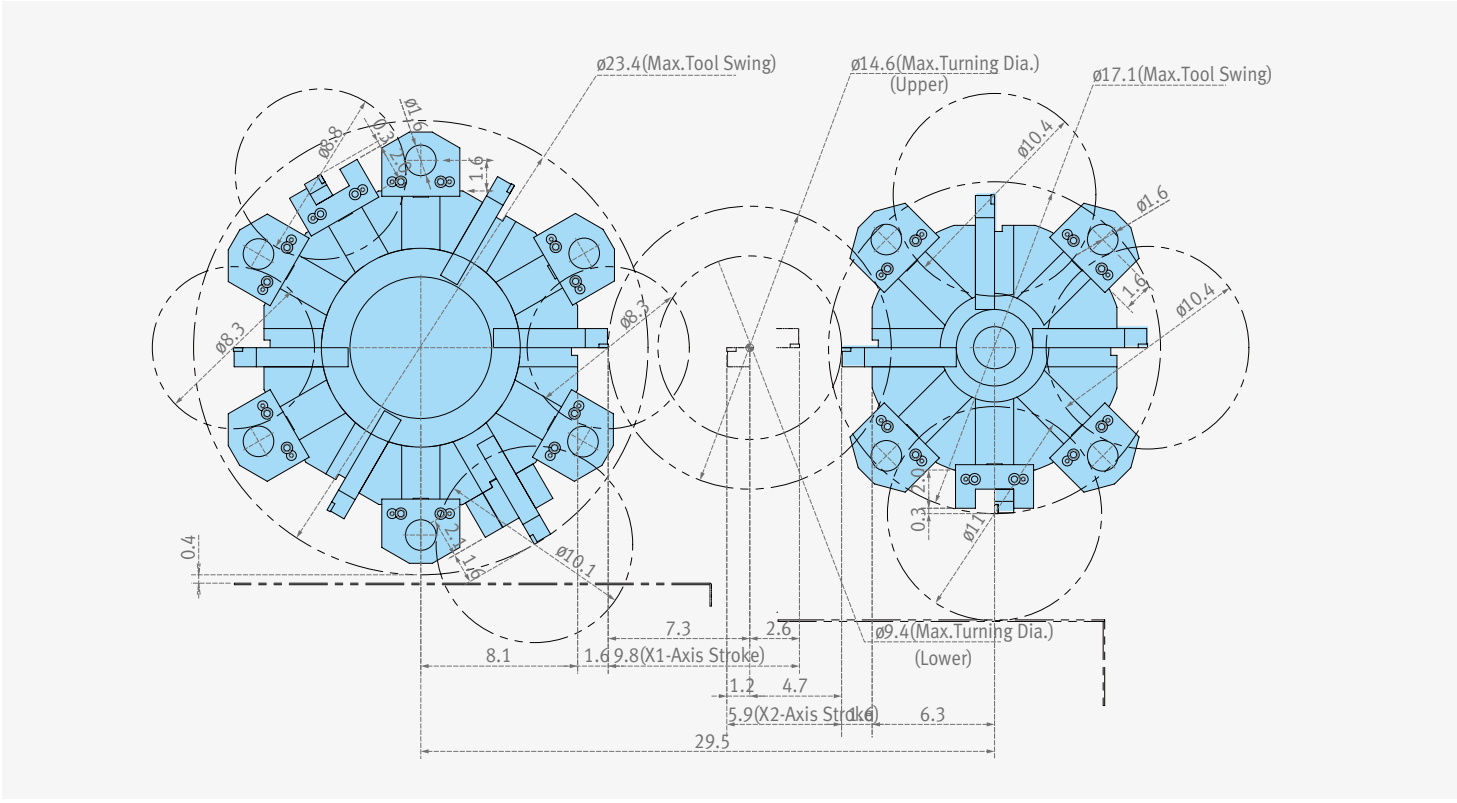

PUMA TL 2000M /2500M

Unit : mm (inch)

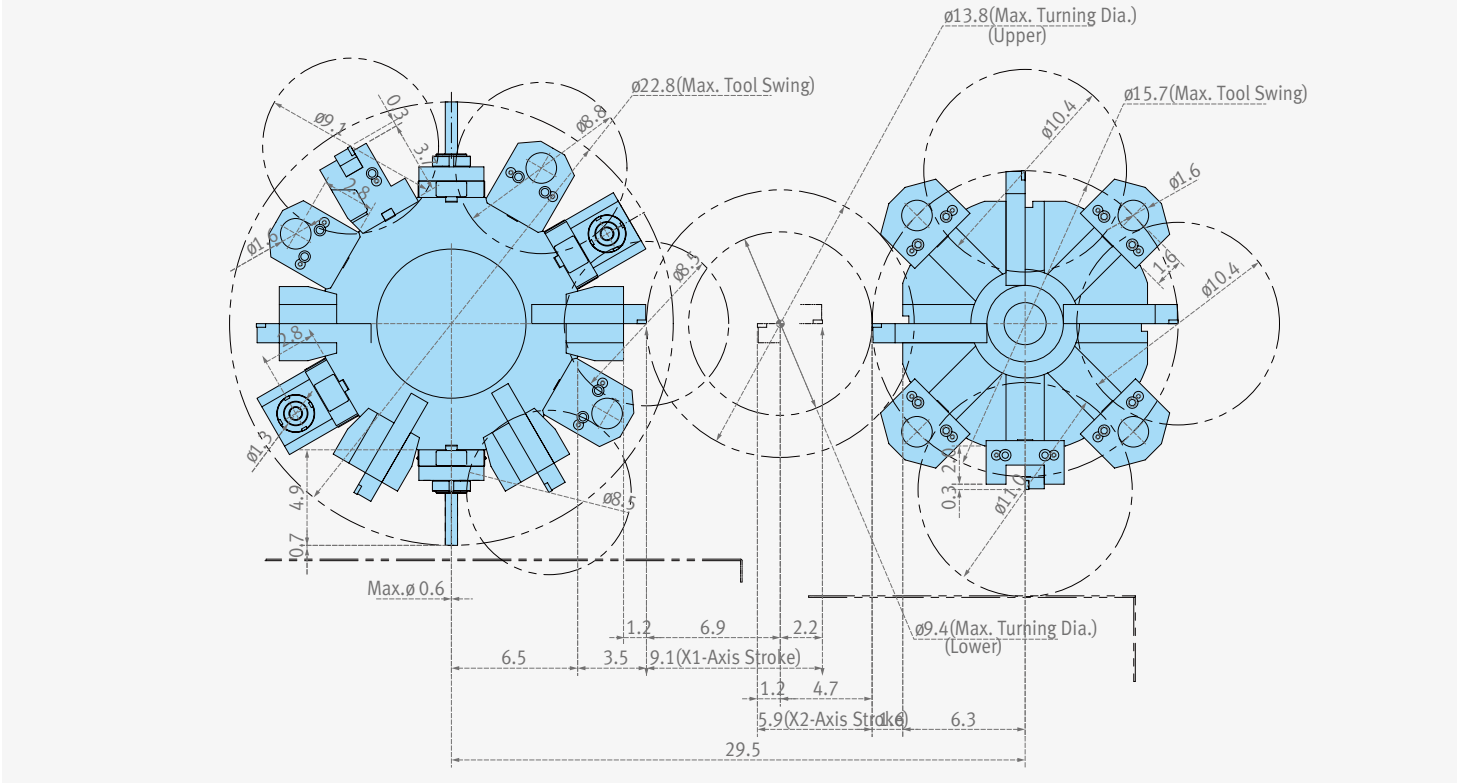

Working Range Diagram

Unit : inch

PUMA TL 2000[L]/2500[L]

OD Tool holder

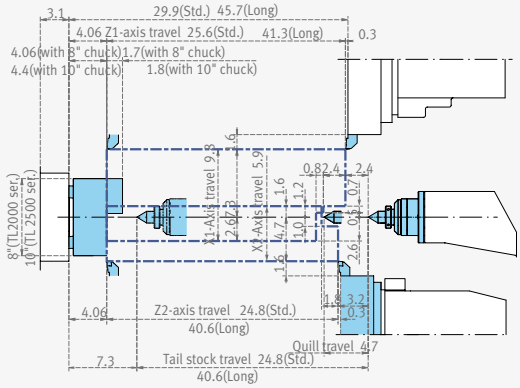

ID Tool holder

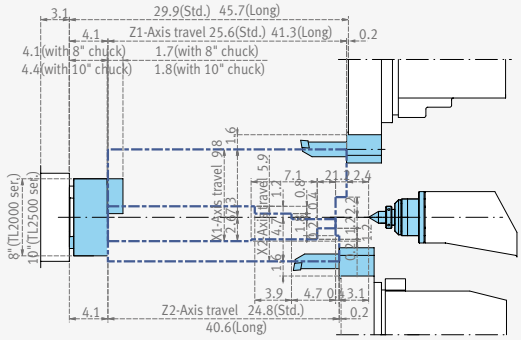

PUMA TL 2000M[LM]/2500M[LM]

OD Tool holder

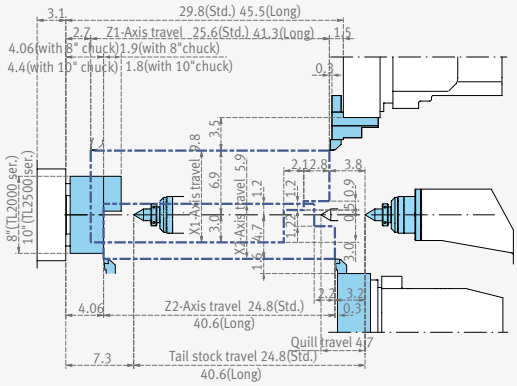

ID Tool holder

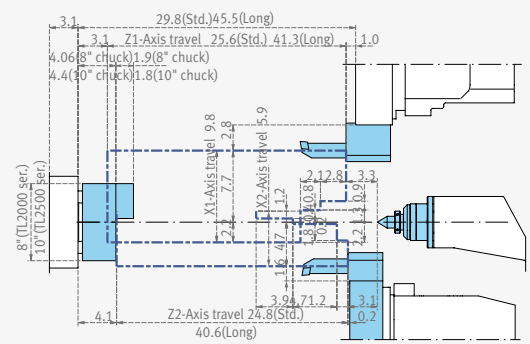

Angular milling tool holder option

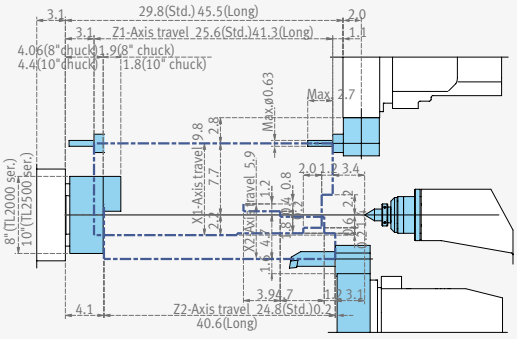

Straight milling tool holder option

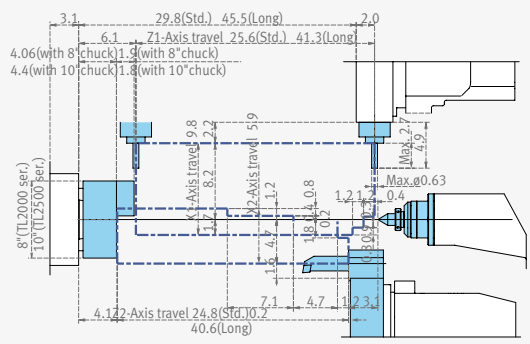

PUMA TL 2000M[LM]/2500M[LM]

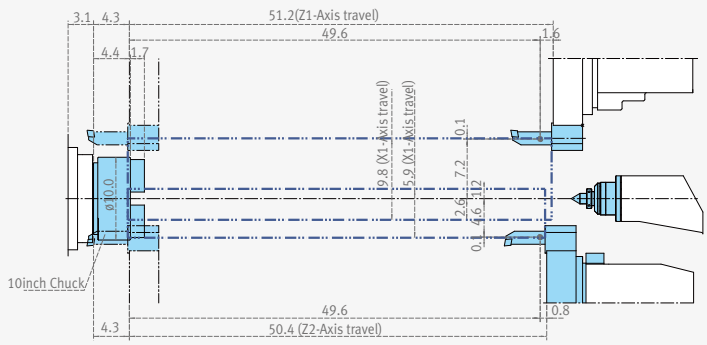

Machine Specifications

PUMA TL2000/2500 series

Description			Unit	PUMA TL2000 [L]	PUMA TL2000M [LM]	PUMA TL2500 [L/XL]	PUMA TL2500M [LM/XLM]
Capacity	Swing over bed		mm (inch)	600 (23.6)			
	Swing over saddle(Upper)		mm (inch)	430 (16.9)			
	Recom. Turning diameter		mm (inch)	210 (8.3)		255 (10.0)	
	Max. Turning diameter (Upper/Lower turret)		mm (inch)	370/240 (14.6/9.4)	350/240 (13.8/9.4)	370/240 (14.6/9.4)	350/240 (13.8/9.4)
	Max. Turning length		mm (inch)	600 [1000/1250] (23.6 [39.4/49.2])			
	Bar working diameter		mm (inch)	ø65 (2.6)		ø76 (3.0)	
Feedrate	Travel distance	X1 / 2-axis	mm (inch)	X1 : 250 (9.8) / X2 : 150 (5.9)			
		Z1 / 2-axis	mm (inch)	Z1 : 650 [1050/1300] (25.6 [41.3/51.2]) / Z2 : 630[1030/1280](24.8 [40.6/50.4])			
	Rapid traverse	X1 / 2-axis	m/min (ipm)	20 (787.4)			
		Z1 / 2-axis	m/min (ipm)	24 (944.9)			
Spindle	Spindle speed		r/min	5000		4000	
	Spindle nose		ASA	A2#6		A2#8	
	Spindle bearing diameter (Front)		mm (inch)	110 (4.3)		130 (5.1)	
	Spindle through hole diameter		mm (inch)	76 (3.0)		86 (3.4)	
	Cs Spindle Index angle		deg	-	360 (in 0.001deg. increment)	-	360 (in 0.001deg. increment)
Motor	Left spindle motor(Int.)		kW (Hp)	22/18.5/15 (29.5/24.8/20.1) (10min/30min/Cont.)		26/22 (34.9/29.5) (30min/Cont.)	
	Rotary tool spindle motor*		kW (Hp)	-	5.5 (7.4)	-	5.5 (7.4)
	Servo motor	X1-axis	kW (Hp)	3.0 (4.0)			
		X2-axis	kW (Hp)	1.6 (2.1)			
		Z1-axis	kW (Hp)	3.0 (4.0)			
		Z2-axis	kW (Hp)	3.0 (4.0)			
	Coolant pump			0.9 (1.2)			
Turret	No. of tool stations		ea	12(Upper) + 8(Lower)			
	OD tool height		mm (inch)	25 (1.0)			
	Boring bar diameter		mm (inch)	40 (1.6)			
	Indexing time		sec	0.15			
	Rotary tool spindle speed*		r/min	-	5000	-	5000
Tail Stock	Quill diameter		mm (inch)	100 (3.9)			
	Quill bore taper		ASA	MT#5			
	Quill travel		mm (inch)	120 (4.7)			
Power Source	Power consumption		kVA	39	41	48	49
Machine dimensions	Length		mm (inch)	3250 [3900/4510] (128.0 [153.5/177.6)			
	Width		mm (inch)	2118 [2144/2630] (83.4 [84.4/103.5])			
	Height		mm (inch)	1930 (76.0) [PUMA 2500XL/XLM: 2115(83.3)]			
	Weight		kg (lb)	7200 [8400] (15432.1 [18518.6])		7300 [8500/9600] (16093.5 [18739.0/21164.1])	
Control	NC system		-	DOOSAN Fanuc i Plus {Fanuc 31i}			

* Rotary tool spindle is available on only upper turret of TL2000M[LM] / TL2500M[LM/XLM]. [ ] : Long bed machines

NC Unit Specifications

FANUC

● Standard ○ Optional X Not applicable

NO.	Division	Item	Specifications	DOOSAN Fanuc i Plus		Fanuc 31i	
				2-Axis	M	2-Axis	M
1	Controlled axis	Control paths		2 Path	2 Path	2 Path	2 Path
2		Controlled axes		4 (X1,Z1, X2,Z2,)	5 (X1,Z1, C1,X2,Z2)	4 (X1,Z1, X2,Z2,)	5 (X1,Z1, C1,X2,Z2)
3		Simultaneously controlled axes		2 axes	3 axes	2 axes	3 axes
4		Axis control by PMC		●	●	●	●
5		Cs contouring control		X	●	X	●
6		Synchronous/Composite control (C1 & C2 Synchro Control)		X	X	X	X
7		Arbitrary angular axis control		X	X	X	X
8		Increment system A,B	0.001 mm, 0.001 deg, 0.0001 inch	●	●	●	●
9		HRV2 control		●	●	●	●
10		Inch/metric conversion		●	●	●	●
11		Stored limit check before move		●	●	○	○
12		Chuck and tail stock barrier		○	○	○	○
13		Chamfering on/off		●	●	●	●
14		Interference check for rotary area		X	X	X	X
15		Unexpected disturbance torque detection function		●	●	●	●
16		Position switch		●	●	●	●
17	Operation	Tool retract and recover		○	○	○	○
18		Dry run		●	●	●	●
19		Single block		●	●	●	●
20		Handle interruption		○	○	○	○
21		Incremental feed	x1,x10,x100	●	●	●	●
22		Manual handle retrace		○	○	○	○
23		Active block cancel		○	○	○	○
24	Feed function (CONTINUED)	Bell-shaped acceleration/ deceleration after cutting feed interpolation		●	●	●	●
25		Override cancel		●	●	●	●
26		AI contour control I	G5.1 Q_, 40 Blocks	○	○	○	○
27		AI contour control II	G5.1 Q_, 200 Blocks	○	○	○	○
28		Rapid traverse block overlap		●	●	●	●
29	Program input (CONTINUED)	Interruption type custom macro		○	○	○	○
30		Canned cycle		●	●	●	●
31		Multiple repetitive cycles	G70~G76	●	●	●	●
32		Multiple repetitive cycles II	Pocket profile	●	●	●	●
33		Canned cycle for drilling		●	●	●	●
34		Automatic corner override		X	X	○	○
35		Custom software (Total amount of each path)	6MByte	X	X	●	●
36		Custom software (Total amount of each path)	8MByte	●	●	X	X
37		Coordinate system shift		●	●	●	●
38		Direct input of coordinate system shift		●	●	●	●
39		Real time custom macro		X	X	X	X
40		Pattern data input		○	○	○	○
41	Operation Guidance Function	EZ Guide i (Conversational Programming Solution)		●*1)	●*1)	●*1)	●*1)
42		EZ Operation package		●	●	●	●
43		iHMI with Machining Cycle (Conversational Programming Solution)		○*2)	○*2)	○*2)	○*2)

FANUC

● Standard ○ Optional X Not applicable

NO.	Division	Item	Specifications	DOOSAN Fanuc i Plus		Fanuc 31i	
				2-Axis	M	2-Axis	M
44	Tool function/ Tool compensation	Tool offset pairs	64-pairs	X	X	●	●
45			99-pairs	X	X	○	○
46			128-pairs	●	●	○	○
47			200-pairs	○	○	○	○
48			400-pairs	X	X	○	○
49			499-pairs	X	X	○	○
50			999-pairs	X	X	○	○
51			2000-pairs	X	X	○	○
52		Common offset memory between each path	Only for more than 2 path control	●	●	●	●
53		Tool offset		●	●	●	●
54		Tool radius/Tool nose radius compensation		●	●	●	●
55		Tool geometry/wear compensation		●	●	●	●
56		Automatic tool offset	G36/G37	●	●	●	●
57		Direct input of tool offset value measured		●	●	●	●
58		Tool life management		●	●	●	●
59	Accuracy compensation function	Backlash compensation for each rapid traverse and cutting feed		●	●	●	●
60		Stored pitch error compensation		●	●	●	●
61	Editing operation	Part program storage size & Number of registerable programs	640M(256KB)_500 programs	X	X	●	●
62			1280M(512KB)_1000 programs	X	X	○	○
63			2560M(1MB)_1000 programs	X	X	○	○
64			5120M(2MB)_1000 programs	●	●	○	○
65			10240M(4MB)_1000 programs	X	X	○	○
66			20480M(8MB)_1000 programs	X	X	○	○
67			2560M(1MB)_2000 programs	X	X	○	○
68			5120M(2MB)_4000 programs	X	X	○	○
69			10240M(4MB)_4000 programs	X	X	○	○
70			20480M(8MB)_4000 programs	X	X	○	○
71		Program protect		●	●	●	●
72		Password function		●	●	●	●
73		Playback		○	○	○	○
74		Memory card program edit & operation	Max 63 programs	●	●	●	●
75	Setting	Machine alarm diagnosis		●	●	X	X
76		CNC screen display		●	●	●	●
77		CNC screen dual display function		●	●	●	●
78	Data input/ output	data server		○	○	○	○
79		External data input		●	●	●	●
80		Memory card input/output		●	●	●	●
81		USB memory input/output		●	●	●	●
82		Automatic data backup		●	●	●	●
83	Interface function	Embedded Ethernet		●	●	●	●
84		Fast Ethernet		○	○	○	○
85	Others	Display unit	15" color LCD	●	●	●	●
86			15” color LCD with Touch Panel	○	○	X	X
87	Robot interface	Robot interface with PMC I/O module		○	○	○	○
88		Robot interface with PROFIBUS-DP		○	○	○	○

*1) Only with 15" LCD standard *2) Only with 15" Touch LCD standard

Responding to Customers Anytime, Anywhere

언제 어디서나 고객 니즈에 답하는 두산 공작기계의 전 세계 네트워크

두산 공작기계는 판매 전후, 고객의 니즈에 유연하고 신속하게 대응하여 문제를 해결하는 체계적이고 전문적인 서비스를 제공하고 있습니다. 부품 공급에서 제품 교육, 고장 수리, 기술 지원까지 고객이 있는 전 세계 어느 곳에서나 서비스 네트워크를 통해 신속하게 만날 수 있습니다.

글로벌 서비스 지원 네트워크

법인	딜러 네트워크	테크니컬 센터 판매지원, 서비스 지원, 부품 공급 지원	서비스 포스트	공장
4	167	51	200	3

한국 서비스 지원 네트워크

영업 지사	딜러 네트워크	테크니컬 센터	서비스 포스트
6	37	2	52

Doosan Machine Tools Customer Support Service

제품 상담부터 판매 후까지 제품의 사이클에 맞는
다양하고 전문적인 서비스를 통해 고객의 비즈니스 성공을 지원합니다.

부품 공급

- 무상 부품 공급
- 유상 부품 공급
- 부품 수리

필드 서비스

- 순회 서비스 및 설치 시운전
- 유/무상 고장 수리
- 정기 점검 / 예방 정비

기술 지원

- 가공 기술 지원
- 기술 문의/회신
- 기술 자료 지원

교육

- 프로그래밍/장비 운전 교육
- 장비 유지 관리 교육
- Application Engineering

Major Specifications

PUMA TL2000 / 2500 series

Description	Unit	PUMA TL2000/M [L]	PUMA TL2500/M [L/XL]
Max. turning dia.	mm (inch)	Ø370 / Ø350 (Ø14.6 / Ø13.8)	
Max. turning length	mm (inch)	600 [1000/1250] (23.6 [39.4/49.2])	
Standard chuck size	inch	8	10
Bar working dia.	mm (inch)	Ø65 (Ø2.6)	Ø76 (Ø3.0)
Max. spindle speed	r/min	5000	4000
Max. spindle power	kW (Hp)	22 (29.5)	26 (34.9)

*{} : Option

Doosan Machine Tools

www.doosanmachinetools.com

Head Office
22F T Tower, 30, Sowol-ro 2-gil, Jung-gu, Seoul, Korea, 04637
Tel +82-2-6972-0370 / 0350
Fax +82-2-6972-0400

Doosan Machine Tools America
19A Chapin Rd., Pine Brook, NJ 07058, U.S.A.
Tel +1-973-618-2500
Fax +1-973-618-2501

Doosan Machine Tools Europe
Emdener Strasse 24, D-41540 Dormagen, Germany
Tel +49-2133-5067-100
Fax +49-2133-5067-111

Doosan Machine Tools India
No.82, Jakkuar Village, Yelahanka Hobil, Bangalore-560064
Tel + 91-80-2205-6900
E-mail india@doosanmt.com

Doosan Machine Tools China
Room 101,201,301, Building 39 Xinzhuan Highway No.258 Songjiang District,China Shanghai(201612)
Tel +86 21-5445-1155
Fax +86 21-6405-1472

* For more details, please contact Doosan Machine Tools.
* The specifications and information above-mentioned may be changed without prior notice.
* Doosan Machine Tools Co., Ltd. is a subsidiary of MBK Partners. The trademark DOOSAN is used under a licensing agreement with Doosan Corporation, the registered trademark holder.

Fire Safety Precautions | There is a high risk or fire when using non-water-soluble cutting fluids, processing flammable materials, neglecting use coolants and modifying the machine without the consent of the manufacturer. Please check the SAFETY GUIDANCE carefully before using the machine.

ver. EN 210104 SU